Sega Master System II

SERVICE MANUAL

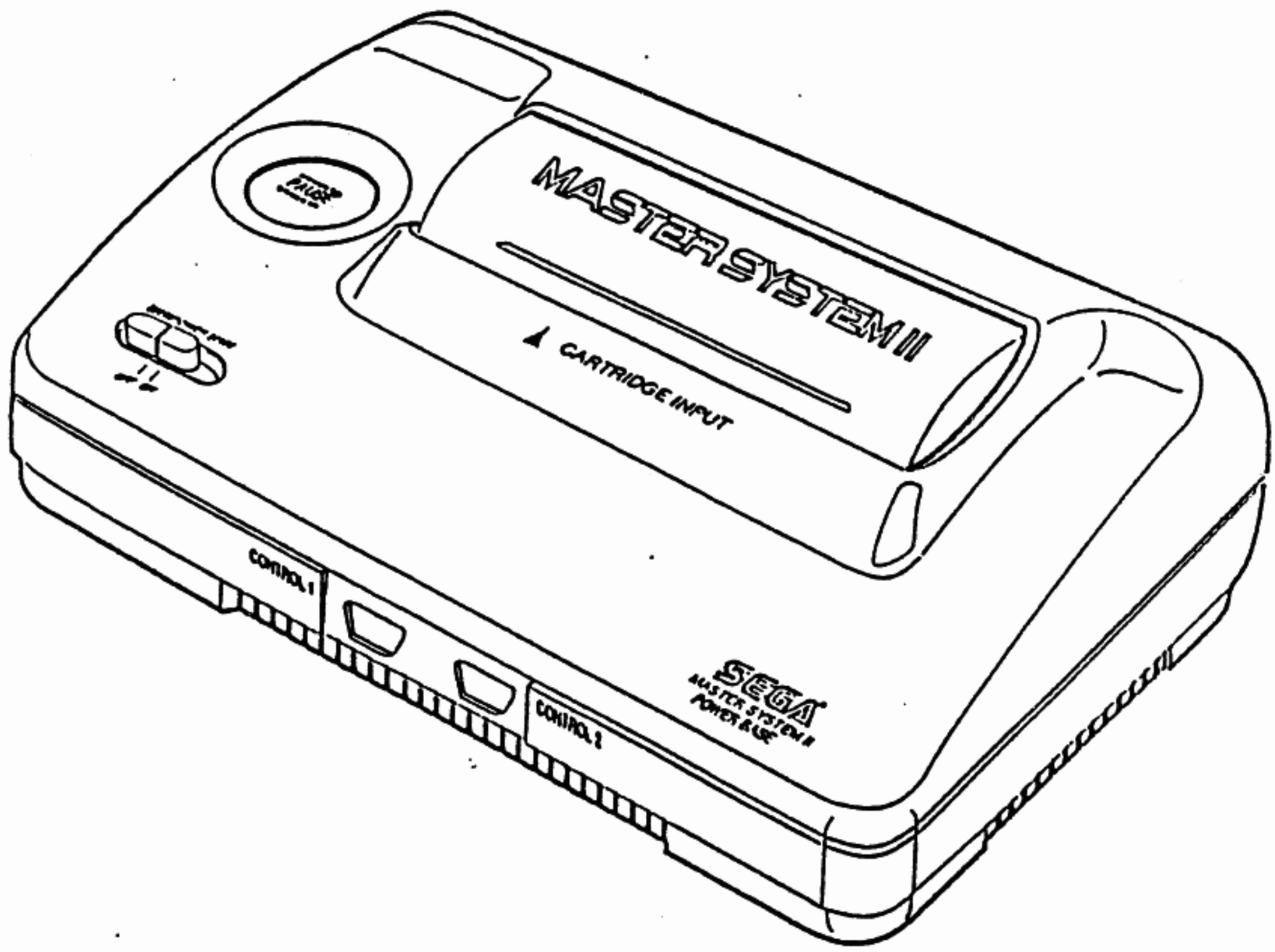

APRIL, 1991
SEGA ENTERPRISES, LTD.
OVERSEAS CONSUMER PRODUCTS DIVISION

TABLE OF CONTENTS

General

1. Product Number and Color Specifications p. 1
2. AC Adaptor Specifications p. 1
3. Product Dimensions and Weight p. 2
4. Electrical Specifications p. 2

Repair Procedures

1. Flowchart for Troubleshooting Fault Locations p. 3
2. Main Unit
   - A. Servicing the main unit p. 4-5
   - B. Possible symptoms for each fault location p. 6
   - C. In the event picture appears alone without sound p. 7
   - D. In the event picture is not present p. 7
   - E. in the event controls do not respond normally p. 8
3. Software (Card or Cartridge) Malfunctions p. 9
4. Auto Switchboxes p. 10
5. Controller Related p. 10

Diagrams and Parts Lists

Schematic Diagram for PAL Version p. 11-13
PCB Parts Location Diagram for PAL Version p. 14-18
Parts List for PAL Version p. 19-21
Schematic Diagram for RGB Version p. 22-23
PCB Parts Location Diagram for RGB Version p. 24
Parts List for RGB Version p. 25-26

1. PRODUCT NUMBER AND COLOR SPECIFICATIONS

Territory	Model No.	Color Format	System	RF Modulator	Channel
America	MK-3006	NTSC	M	200-5118-01 or 200-5115	3/4
Canada	MK-3006-22	PAL	B (VV)	200-5194-02	3/4
Australia	MK-3006-03	PAL	B (VE)	200-5198	0/1
N. Zealand	MK-3006	PAL	D	200-5139	2/3
China	MK-3006-15	PAL	G	200-5086-02	3/4
Germany	MK-3006-18	PAL	G	200-5086-02	36
France	MK-3006-09	PAL	RGB	NONE	-

2. AC ADAPTOR SPECIFICATIONS

Territory	Parts Model No.	Diagram Number	Voltage/ Number	Plug Frequency	Type
America	MK-3006	400-5115	H-0246	AC120V ± 10%/ 60Hz	A Type
Canada	MK-3006-22	400-5123	H-0249	AC120V ± 10%/ 60Hz	A Type
Australia	MK-3006-03	400-5050	H0133	AC240V ± 10%/ 50Hz	S Type
N. Zealand	MK-3006-04	400-5050	H-0133	AC240V ± 10%/ 50Hz	S Type
China	MK-3006-15	400-5093-91	H-0158-01	AC220V ± 10%/ 50Hz	A Type
Germany	MK-3006-18	400-5126		AC220V ± 10%/ 50Hz	C Type

3. PRODUCT DIMENSIONS AND WEIGHT

Main Unit Dimensions	256 (W) x 172 (D) x 81.5 (H) mm
Main Unit Weight	790 g
Packed Dimensions	360 (W) x 216 (W) x 125 (H) mm
Packed Weight	1.7 kg.
Master Carton Dimensions (6 pcs./carton)	450 (W) x 400 (D) x (390 (H) mm
Master Carton Weight	11.5 kg. (0.072 m^3)

4. ELECTRICAL SPECIFICATIONS

Power	AC 220V or 240V, 50Hz
CPU	Z-80A 3.58 MHz
RAM	64 Kbit
V-RAM	128 Kbit
ROM	1Mbit
Scrolling Screen	256 x 192 dot 32 colors displayed from a palette of 64
Sprite Screen	64 sprites of 8 x8 dot or 8 x 16 dot on screen 16 colors displayed from a palette of 64
Character Patterns	Maximum of 448 types
Scrolling Directions	Horizontal, Vertical, Diagonal
Sound	Three types plus noise

REPAIR PROCEDURES

1. FLOWCHART FOR TROUBLESHOOTING FAULT LOCATIONS

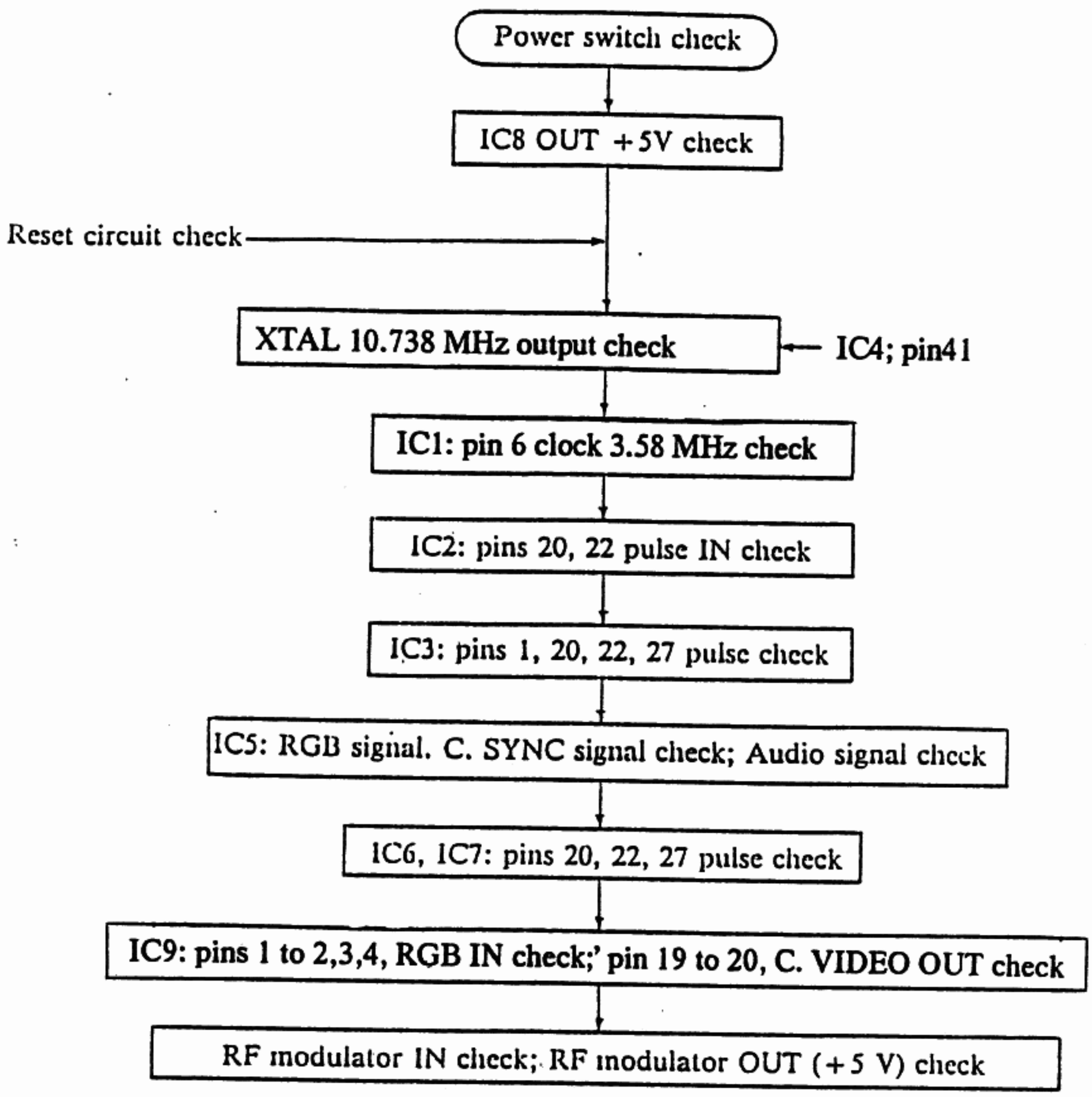

2. MAIN UNIT (POWER BASE)

(A). Servicing the Main Unit (Power Base)

NS=10^{-9}s

Parts Test Procedure	Fault Location	Symptoms
1. IC 8 (LM7805) power check. (1) INPUT DC 9V (2) OUTPUT Vcc=DC5V	1. IC8 (LM7805) faulty. 2. Soldering Faulty. 3. Short Circuit 4. Printed circuit board (PCB) pattern is cut. 5. POWER switch is faulty. 6. Heat sink attachment faulty.	1. LED doesn't light. 2. No picture
2. Power check of ICs (1) Is Vcc 5V power present?	1. PCB pattern is cut. 2. Soldering is faulty.	1. No picture. 2. Screen is black.
3. Is reset circuit operating? (1) Use tester to measure voltage of JR. Should be 0-3.6 V (slowly rises).	1. Capacitor C18 faulty. 2. Soldering faulty. 3. Resistor R4 faulty.	1. No picture. 2. Screen is black.
4. Is oscillator circuit working? (1) Pin 41 of IC4: AC 6 Vp-p; 10.738635 MHz ± 100Hz 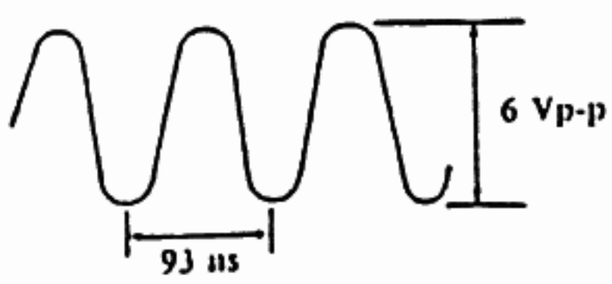 (2) Pin 33 of IC 5 clock 3.579545 MHz ± 30 Hz 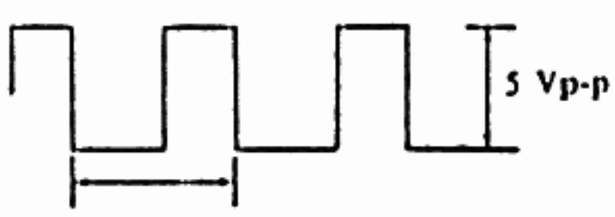 225.6 Ns. (3) Pin 42 of IC4 clock:4.43361875 MHz ± 30Hz 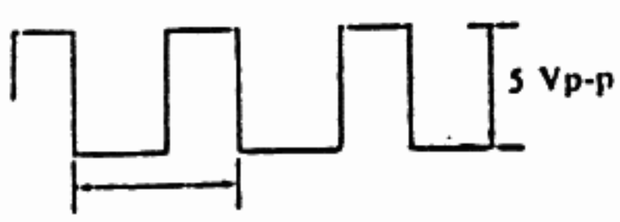 279 Ns.	1.OSC (53M) faulty 2. Soldering faulty 3. PCB pattern is cut 4. IC 4 is faulty 5. Frequency exceeds allowable deviation.	1. No picture 2. Color may be monochromatic

5. Check connectors (1) Make visual check of connector pins. (2) Check for faulty soldering connections	1. Broken from excessive weight. 2. Soldering faulty. 3. PCB pattern is cut. 4. Terminal plugs are dirty.	1. No picture 2. Picture is monochromatic. 3. Characters are unnatural. 4. Controls do not respond properly.
6. Check button switches. (1) Check power button switch. (2) Check Pause button switch	1. Switch is loose. 2. Soldering faulty. 3. PCB pattern is cut. 4. Switch is short-circuited. 1. Soldering faulty 2. PCB pattern is cut 3. Blade is not parallel with circuit board. 4. Switch is short-circuited.	1. No power voltage present. 2. LED doesn't light. 3. No picture. 4. Reset occurs spontaneously. 5. Characters suddenly appear abnormal. 1. Pause doesn't operate properly.
7. Check RF modulator (1) Is OUT +5V present? (2) Check channel selector: Are CH3 and CH4 ok?	1. PCB pattern is cut. 2. Soldering is faulty. 3. RF modulator is faulty. 4. IN event IC9 is faulty. 1. RF modulator is faulty.	1. No picture 2. Picture appears dirty. 3. No sound. 4. Much audio noise. 1. CH3 appears, but not CH4. 2. CH4 appears, but not CH3.

(B) Possible symptoms for each fault location

Fault Location (Contents of malfunction)	Symptom
1. When IC1 (CPU) is faulty.	1. System doesn't operate at all. No picture at all.
2. When IC2 (OS ROM) is faulty.	1. Since this is the program which operates the system, no picture will appear. 2. Depending on the case, a mosaic pattern may appear.
3. When IC3 RAM is faulty.	1. Since this is the unit that temporarily records data, no picture will appear. 2. Depending on the case, a picture may appear, but it is easily distorted.
4. When IC4 is faulty.	1. Since this IC emits several control signals, no picture will appear. 2. Controller may not respond properly. 3. Pause, reset may not respond properly. 4. If no oscillation is present, clock 3.58 MHz is not produced, with result that system does not operate at all; no picture will appear.
5. When IC5 is faulty.	In addition, several control signals are involved; if fault is present, system will not operate and no picture will appear. 1. Even if a picture appears, characters may be distorted. 2. Colors may be improper. 3. Sound may appear alone without picture. 4. Picture may appear alone without sound. 5.
6. When IC6, IC7 are faulty.	1. Since these parts are responsible for temporarily storing color data, picture may not appear. 2. Even if picture appears, colors may be improper. 3. Characters may be distorted. 4. Picture may be move sluggishly or jerkily.
7. When IC8 is faulty.	1. Since this is +5 V stabilized current, if malfunction is present, uniform +5 V is not present; system will not operate and no picture will appear. 2. LED doesn't light.
8. When IC9 is faulty.	1. Since this part converts the RGB signal to composite mode, a malfunction will result in no picture. 2. Even if a picture appears, color may be abnormal.

(C). In the event picture appears alone without sound

Service Procedures	Fault Location
1.Is audio signal output from pin 15 of IC5? (1) MAX 300 mVp-p (2) 20 Hz-20kHz	1. Soldering is faulty. 2. PCB pattern is cut. 3. Q48, Q49, R47 are faulty 4. R46 is faulty 5. IC5 is faulty. 6. RF modulator is faulty.

(D) In event picture is not present.

Service Procedures	Fault Location
1. Is video signal present at pin 3 of RF modulaor? 2. Is video signal output from pons 19 and 20 of IC9? 3. Is RGB signal present at pins 1,2,3, and 4 of IC9?	1. C38, R29 is absent or faulty. 2. Soldering faulty. 3. PCB pattern is cut. 4. RF modulator is faulty (when picture is present on RF). 5. IC9 is faulty. 6. Peripheral parts around IC9 are faulty.

R : 2.5V
G 3 2V
B 4 2.6V

(E) In event controls do not respond normally

Symptom(s)	Fault Location(s)
1. Game doesn't start. 2. Button may not respond when pressed. 3. Absolutely no response at all.	1. CON2 or CON3 faulty (disconnection) 2. Soldering faulty. 3. PCB pattern is cut. 4. IC is faulty. 5. EMI filter is faulty. 6. Resistor 330 ohm is faulty. 7. Check for continuity between CON2 and CON3 terminals and terminals of IC4.
4. Demonstration screen doesn't appear. 5. Switch stays depressed in middle of game. 6. Switch remains fixed in one direction. 7. Starts by itself.	1. CON2 or CON3 is faulty (short-circuited) 2. Soldering is short-circuited. 3. PCB pattern is short-circuited. 4. IC4 is faulty.

3. SOFTWARE

Software (Card or Cartridge) Malfunctions

Symptoms	Fault Location
1. No picture. Picture remains monochromatic. Picture is mosaic pattern.	1. Connector (50 pin) is dirty, disconnected, or other connection fault. 2. Soldering faulty. 3. Short-circuit. 4. Capacitor is missing or faulty. 5. IC is damaged from overheating or static electricity.
2. Characters are disrupted suddenly in middle of game. Reset occurs spontaneously in middle of game. Other abnormal symptoms appear in middle of game.	1. Connection fault at connector (50 pin). 2. Soldering faulty. 3. Capacitor is missing or faulty. 4. IC runaway overheating. 5. In the case of number 4 above, the problem may be rectified by adding a capacitor 100PF—180PF at A13 (address 13). 6. IC is faulty.

4. AUTO SWITCHBOXES

Symptoms	Fault Location
1. No picture. Game picture doesn't appear. TV picture doesn't appear.	1. Cable is cut or shorted. 2. Plug is faulty. 3. Soldering is faulty on cable connection terminal. 4. PCB pattern is broken or interrupted. 5. Auto-switcher unit is faulty.
2. Sound is bad. Much audio noise.	1. Cable is cracked. 2. Soldering faulty. 3. Plug connection is faulty. 4. Auto switcher is faulty (adjustment faulty).

5. CONTROLLER RELATED

Control pads

Symptoms	Fault Location
1. Controller does not operate. Doesn't move as it should. Game doesn't start.	1. Cable is cut. 2. Faulty connection at connector. 3. PCB pattern is cut. 4. Conductive rubber is faulty. 5. Soldering faulty.
2. Moves spontaneously by itself. Switch remains depressed in one direction.	1. Cable is shorted. 2. Solder is greasy. 3. Conductive rubber is stuck.

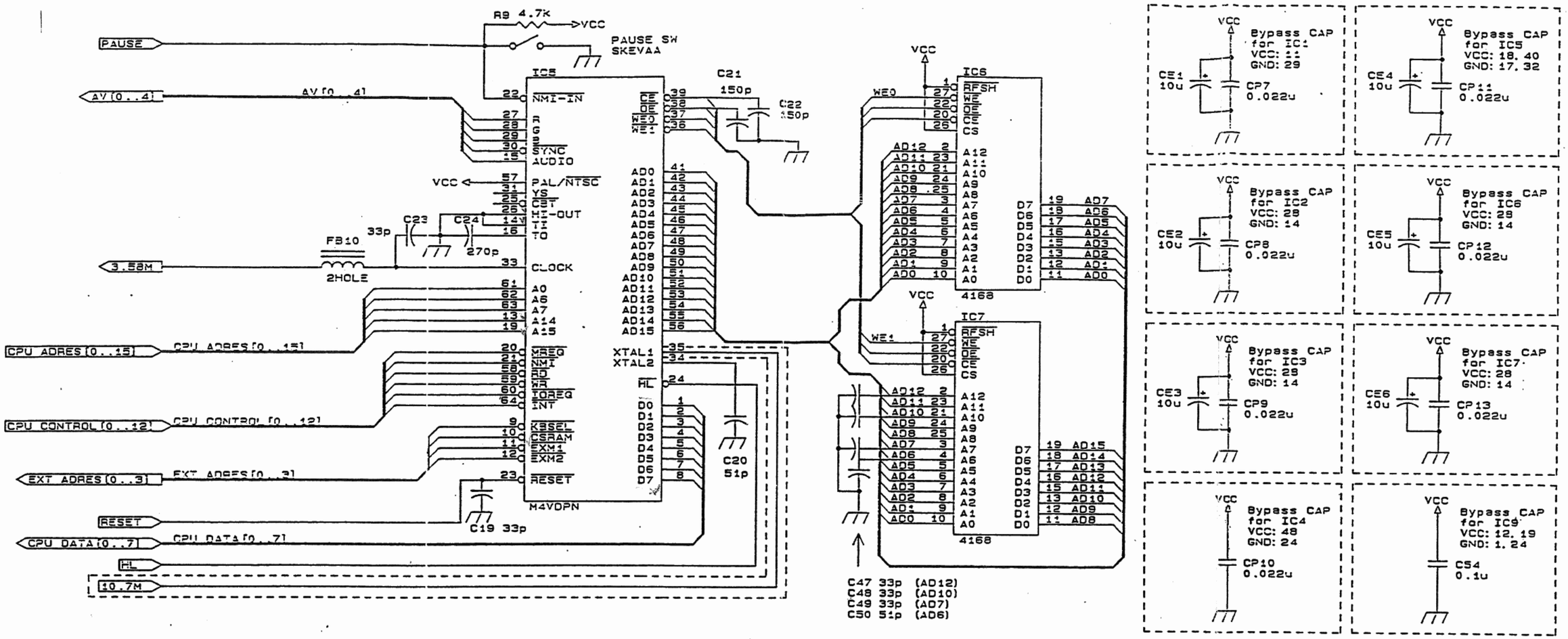

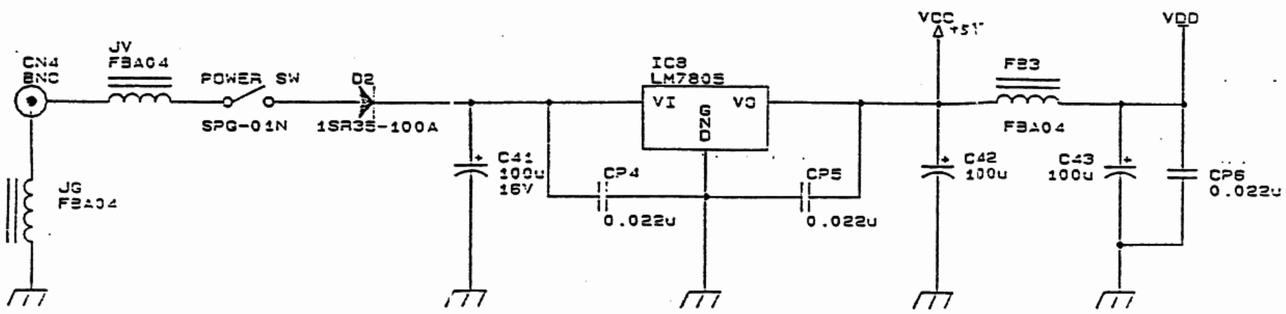

SEGA ENTERPRISES,LTD.	APR. 出丸 10/31 '90
	ASSY
THIS DRAWING WILL IN NO WAY BE COPIED. TO BE RETURNED ON DEMAND. 許可なく複写 複製等禁	CK'D 岡本 10/31-'90
	DRW. 鈴木 10/30-'90
IC BD M4JR PAL	REV
	171-5922A
DESCRIPTION	PART NO.
	SHEET 1 OF 3

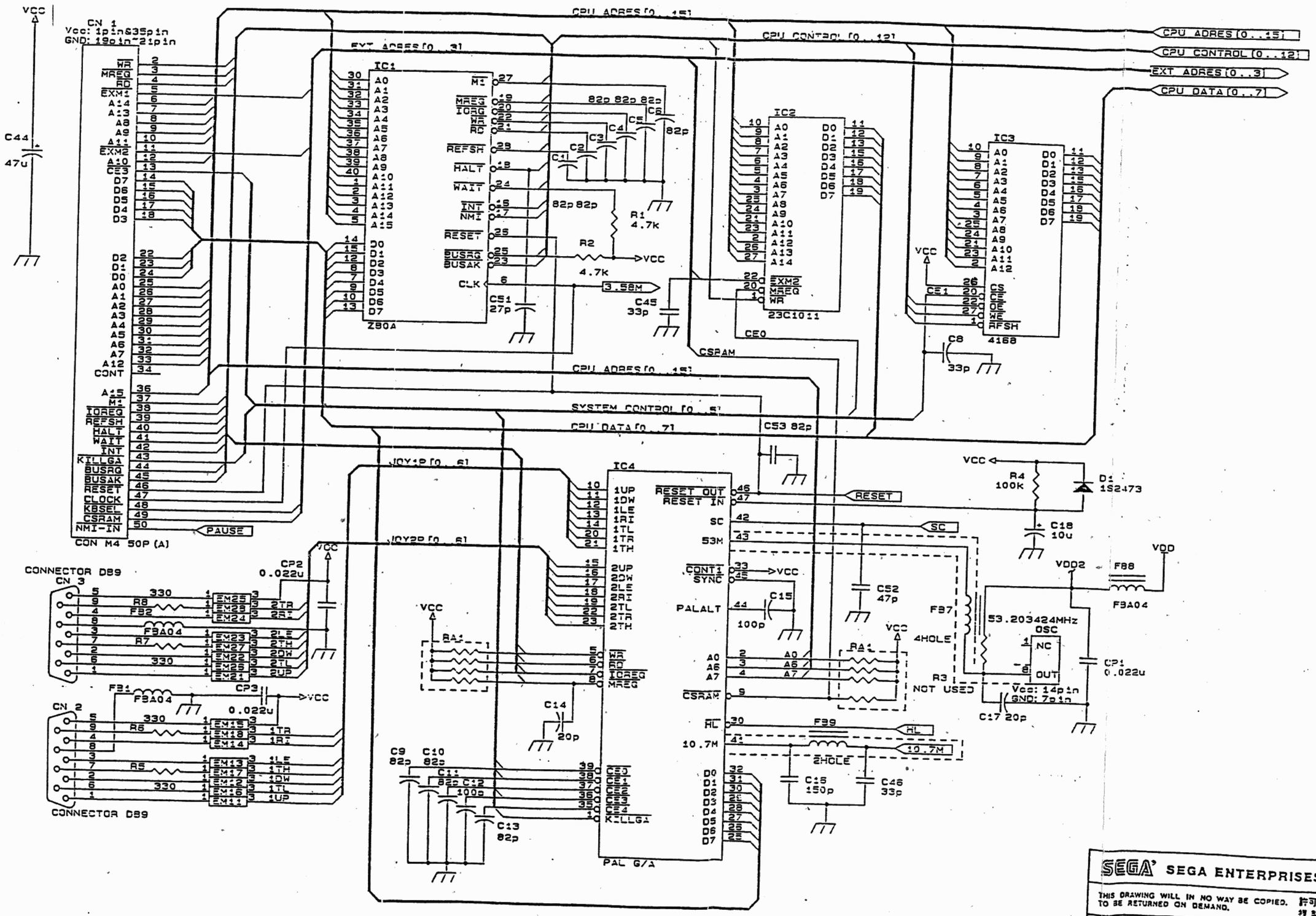

SEGA SEGA ENTERPRISES,LTD.

THIS DRAWING WILL IN NO WAY BE COPIED. TO BE RETURNED ON DEMAND. 許可ナク複写 複製等禁

APR.	12/31 '90
ASS'Y	
CK'D	10/31-'90
DRW.	10/27-'90
REV	
PART NO.	171-5922A
SHEET	2 OF 3

IC BD M4JR PAL

DESCRIPTION

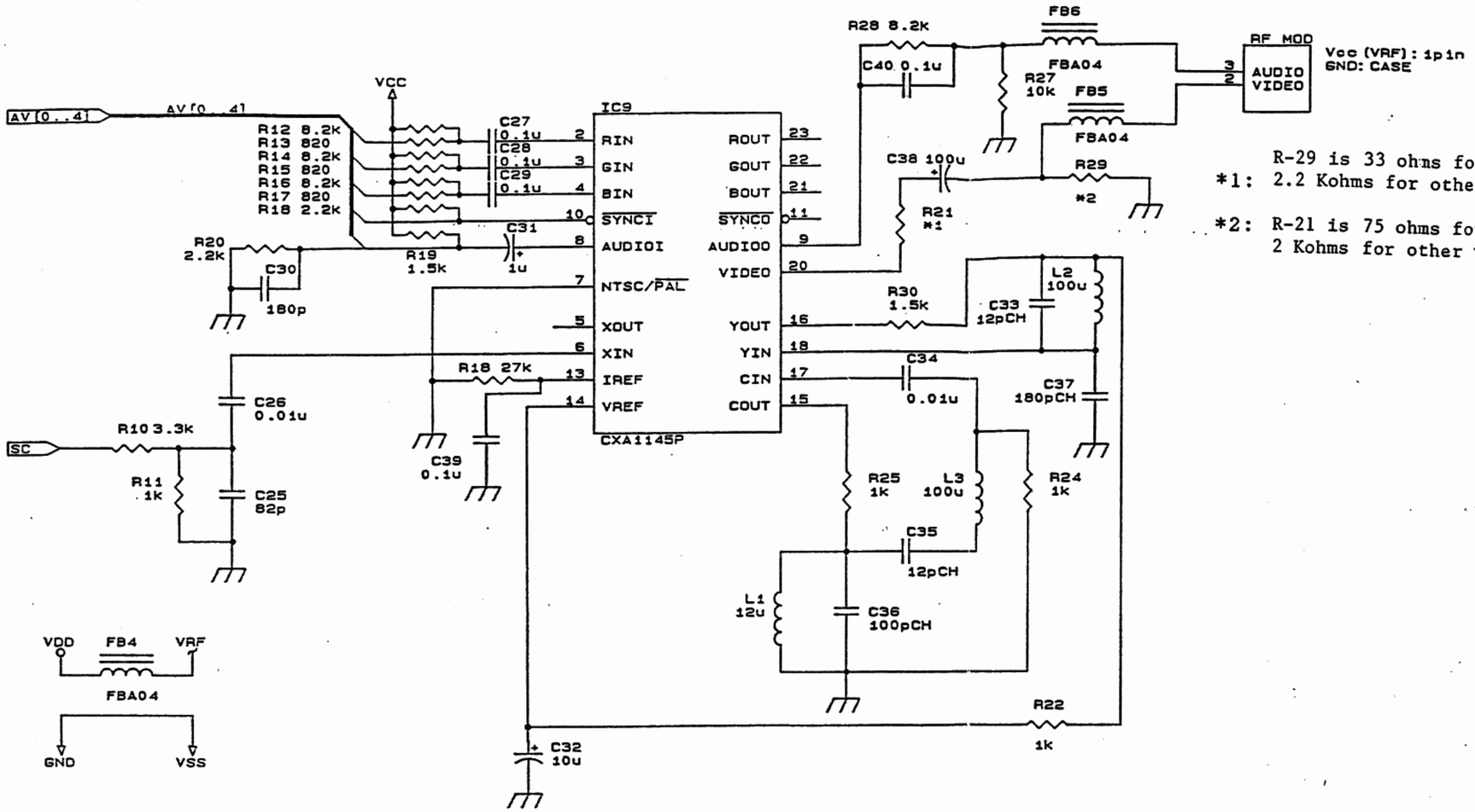

*1: R-29 is 33 ohms for PAL-B (VE), 2.2 Kohms for other versions.

*2: R-21 is 75 ohms for PAL-B (VE), 2 Kohms for other versions.

SEGA SEGA ENTERPRISES, LTD.	APR.	10/31 '90
	ASS'Y	
THIS DRAWING WILL IN NO WAY BE COPIED. TO BE RETURNED ON DEMAND. 許可ナク複写 複製等禁ず	CK'D	10/31-'90
	DRW.	10/17-'90
ICBDM4JR PAL	REV	
	171-5922A	
DESCRIPTION	PART NO.	
	SHEET	3 OF 3

MACHINE	SUB-ASSY
	610-5145

ALTERATIONS

G3	WAS 270p				
G6	WAS 1k				
7L	D.No WAS (0-3)				
1D					
6K					
7F	ADD				
2E	WAS 0.1u				

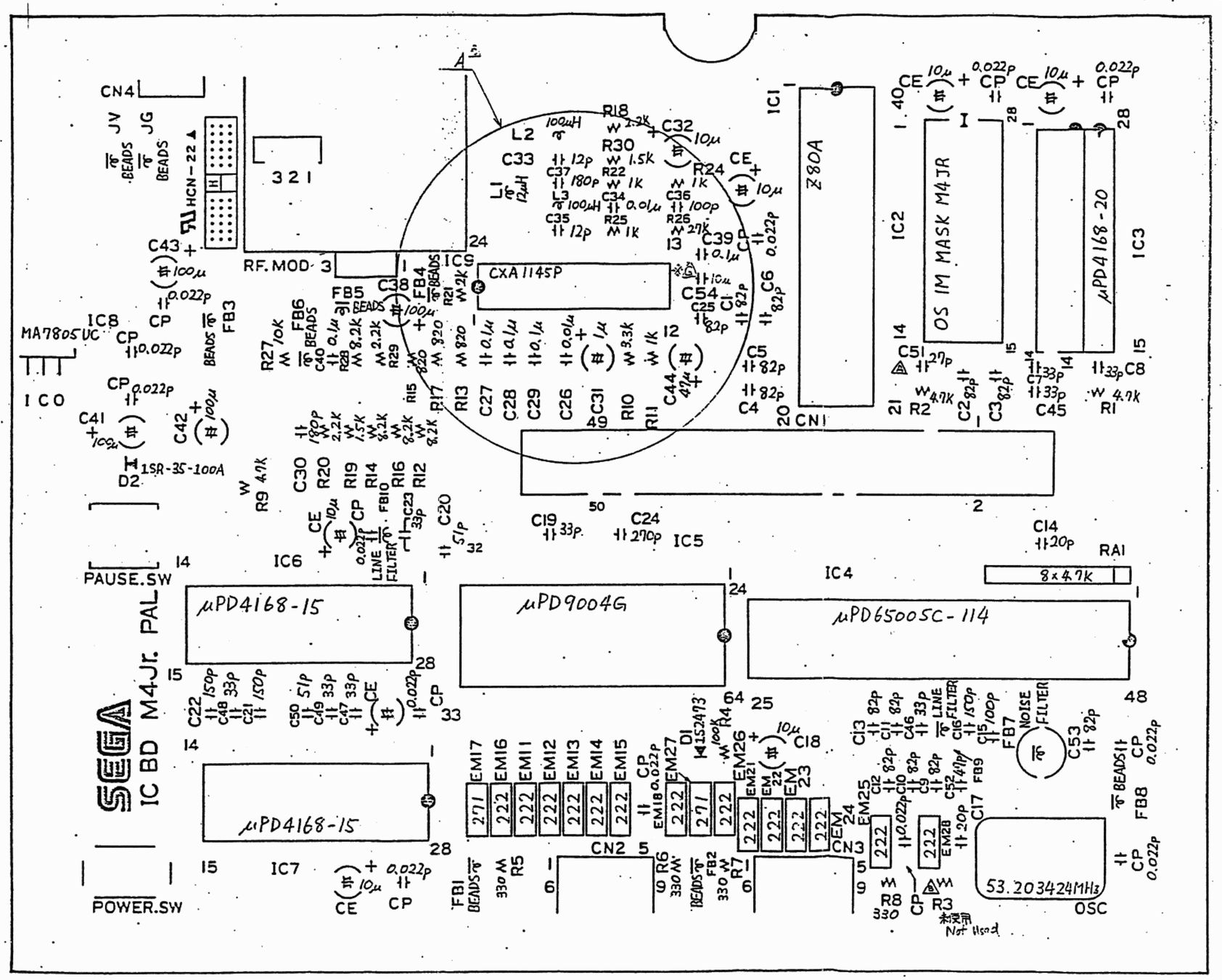

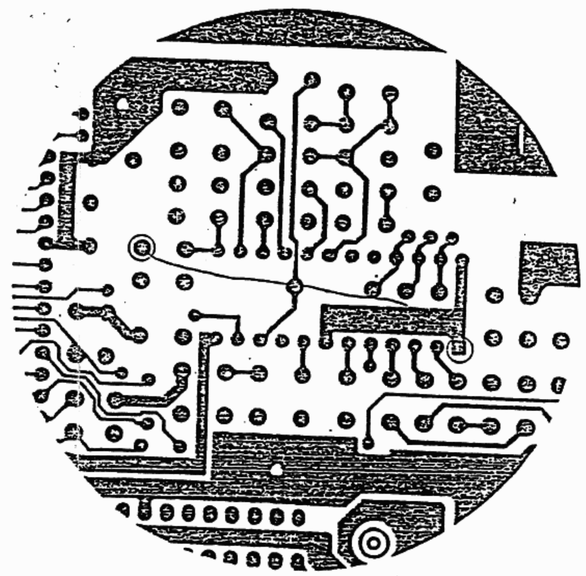

DETAILED DRAWING
(View from Soldering Side)

Connect C39 and GND for IC9 with a jumper wire as shown above.

Land near CXA1145 is the positive side.

SEGA IC BD M4Jr. PAL

SEGA ENTERPRISES, LTD.	THIS DRAWING WILL IN NO WAY BE COPIED. TO BE RETURNED ON DEMAND.		
LIMITS UNLESS OTHERWISE SPECIFIED	3RD QUAT. PROJ. DRAWING	設計・製図	検図
	SCALE / DIM. IN mm	樋本	岡本
MATERIAL	HEAT TREAT.	FINISH	REMARK / REV.
IC BD M4JR PAL-B (VV)			837-7370(D-2/3)
DESCRIPTION			PART NO.

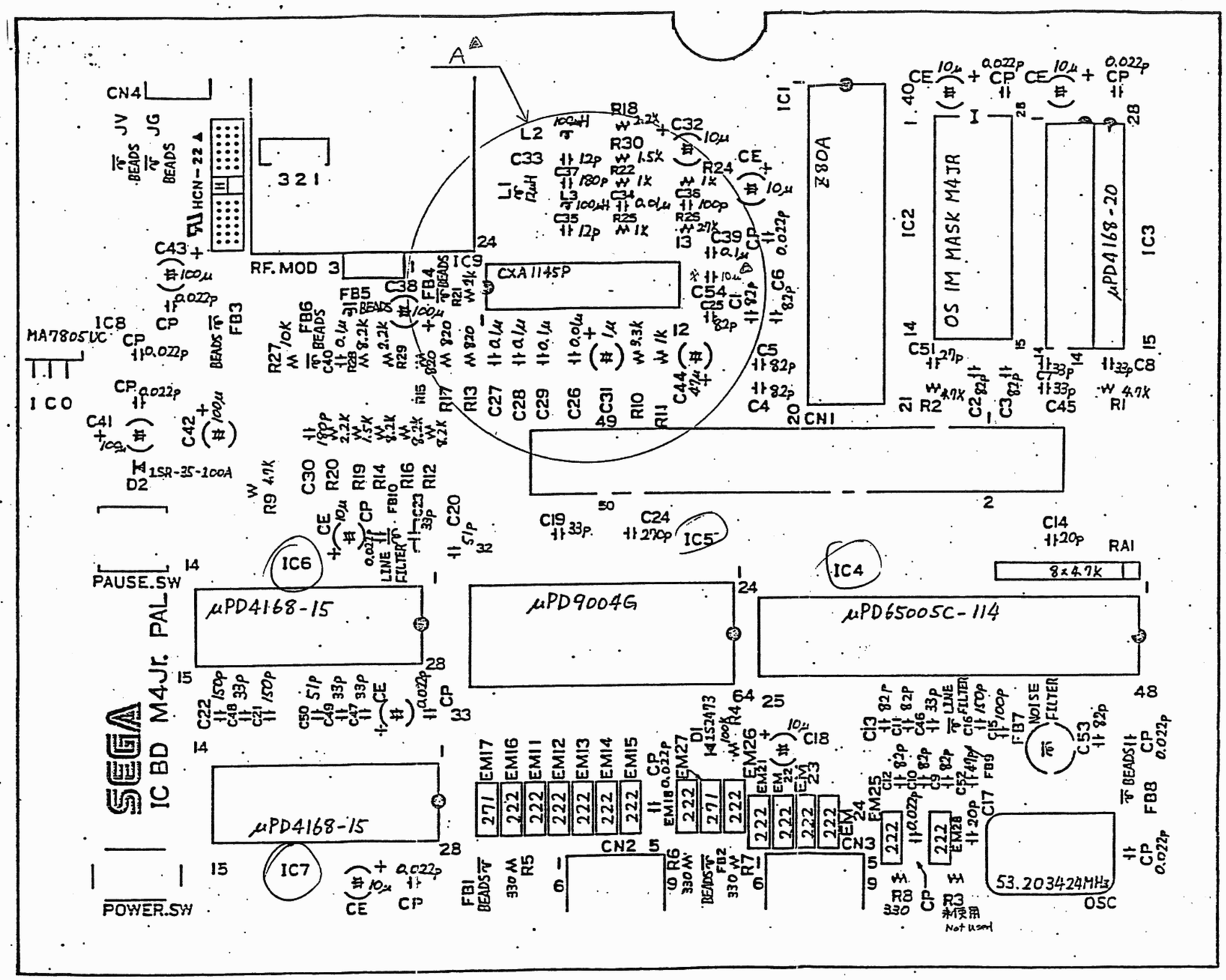

MACHINE	SUB-ASSY 610-5152
ALTERATIONS	
1D	
LK	
7F	ADD
2E	WAS 0.1μ

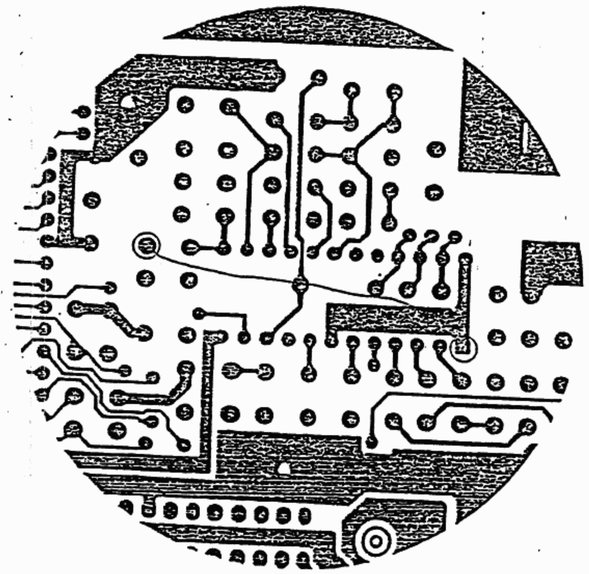

DETAILED DRAWING
(View from soldering side)

Connect C39 and GND for IC9 with jumper wire as above.

Land near CXA1145 is the positive side.

837-7376 (D-2/2)

SEGA ENTERPRISES, LTD.

LIMITS UNLESS OTHERWISE SPECIFIED

3RD QUAT. PROJ. DRAWING

SCALE / DIM. IN mm

MATT'L HEAT TREAT. FINISH

IC BD M4JR PAL-G

DESCRIPTION

REMARK REV.

837-7367 (D-2/3)

PART NO.

MACHINE	SUB-ASS'Y
	610-5146

ALTERATIONS

	D2	WAS 3K	橋本		
△	C3	WAS 2.2K	橋本		
	C6	WAS 1K	橋本	1986-'90	
△	1D				
△	5K				
△	7F	ADD	橋本		
△	2E	WAS 0.1μ	橋本	1989-'91	

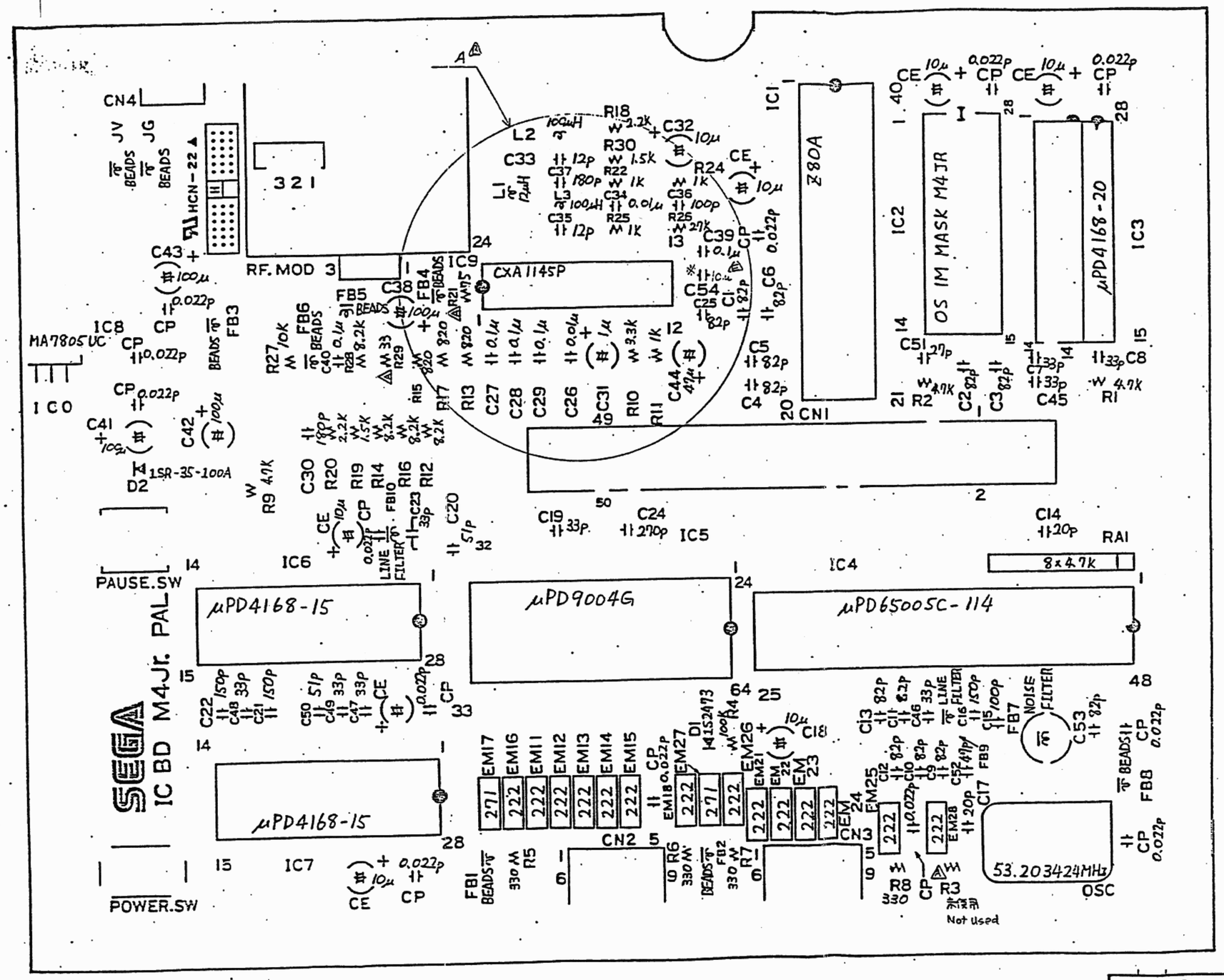

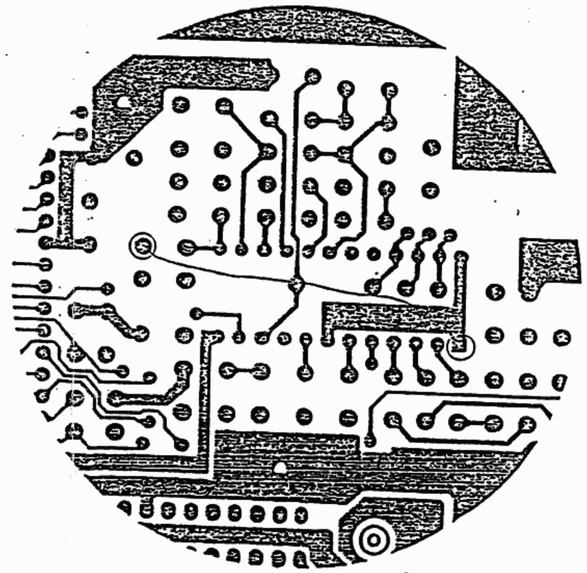

DETAILED DRAWING
(View from soldering side)

Connect C39 and GND for IC9 with jumper wire as above.

Land near CXA1145 is the positive side.

SEGA ENTERPRISES, LTD.			
LIMITS UNLESS OTHERWISE SPECIFIED	3RD QUAT. PROJ. DRAWING	設計・製図	橋本
	SCALE 尺度 /	検図	岡本
	DIM. IN 単位 mm	検証	
		承認	水永
MATL.	HEAT TREAT. 熱処理	FINISH 表面処理	REMARK 特記事項
IC BD M4JR PAL-B (VE)			REV.
DESCRIPTION 名称			837-7371 (D-2/3)
			PART NO. 図番・部品番号

837-7371(D-2/3)

MACHINE	SUB-ASS'Y 610-5159
ALTERATIONS	
6G	WAS 1K
1D	
6K	
7F	ADD
2E	WAS 0.1μ

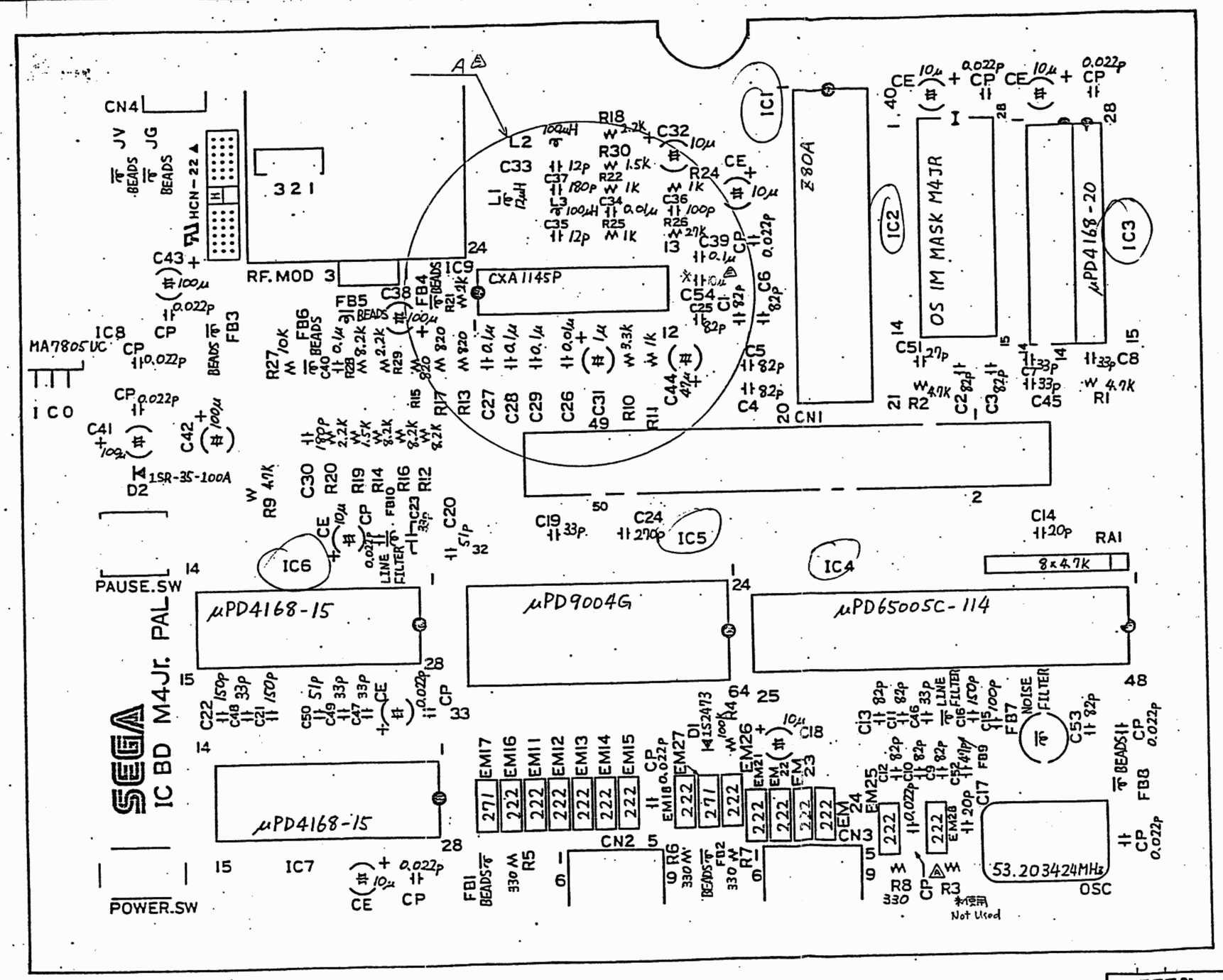

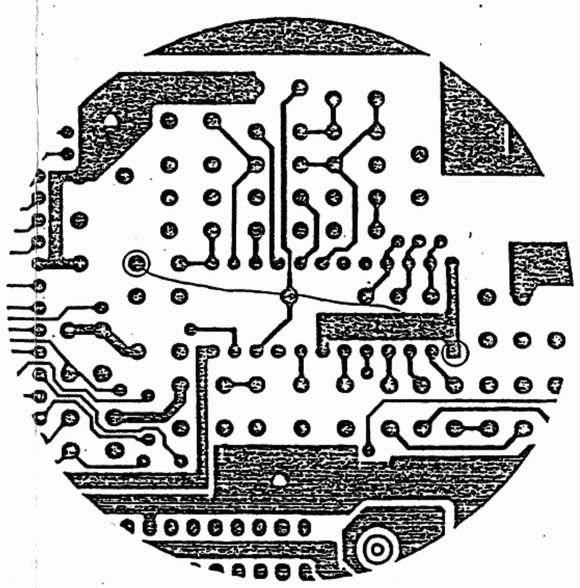

DETAILED DRAWING
(View from soldering side)

Connect C39 and GND for IC9 with jumper wire as above.

Land near CXA1145 is the positive side.

SEGA ENTERPRISES, LTD.			
LIMITS UNLESS OTHERWISE SPECIFIE.	3RD QUAT. PROJ. DRAWING	設計	承認
SCALE	/	標本	永永
DIM. IN	mm	10/17-90	11/1-90
MATERIAL	HEAT TR.	FINISH	REMARK / REV.
IC BD M4JR PAL-D			837-7559 (D-2/3)
DESCRI			PART NO.

837-7559(D-3/3)

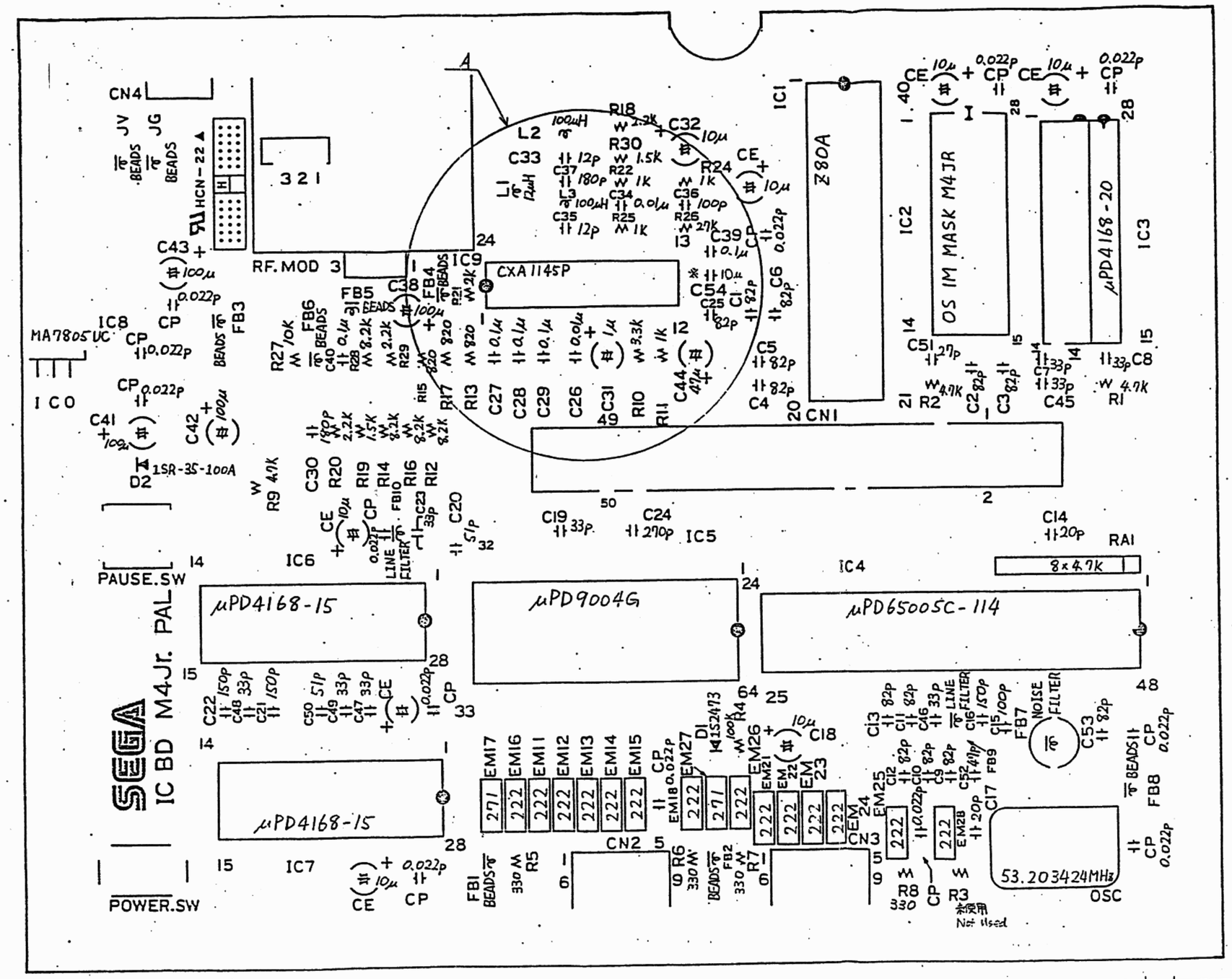

Land near CXA1145 is the positive side.

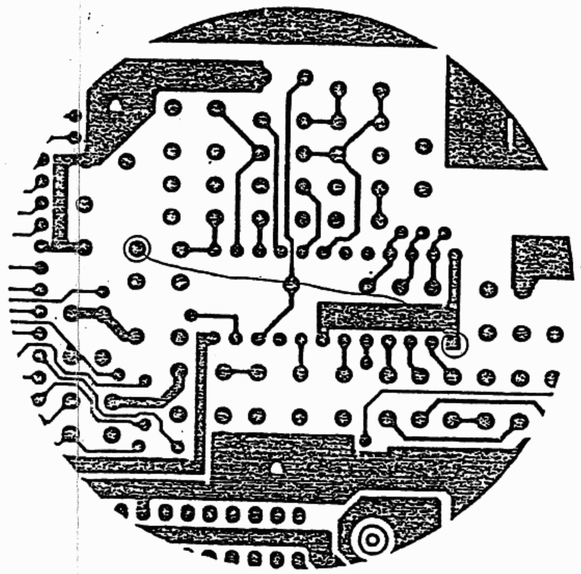

DETAILED DRAWING
(View from soldering side)

Connect C39 and GND for IC9 with jumper wire as above.

MACHINE 機種	SUB-ASS'Y 組図番
	610-5130
ALTERATIONS 改訂	

SEGA SEGA-ENTERPRISES, LTD. THIS DRAWING WILL IN NO WAY BE COPIED, TO BE RETURNED ON DEMAND. 許可ナク複写 複製等厳禁

LIMITS UNLESS OTHERWISE SPECIFIED 一般公差	3RD QUAT. PROJ. DRAWING 第三角法	設計・制図	検図	検認	承認
	SCALE 尺度 / DIM. IN 単位 mm	稲垣	岡本		水永
		3/4-91	3/4-91		3/4'91
MATERIAL 材料	HEAT TREAT. 熱処理	FINISH 表面処理	REMARK 特記事項	REV.	
IC BD M4JR PAL-I			837-7369 (D-2/3)		
DESCRIPTION 名称			PART NO. 図番・部品番号		

Parts List For Master System II PAL Version

LOCATION	PART NUMBER	DESCRIPTION
AC ADAPTOR	400-5130	AC ADAPTOR AC240-/DC 9V 0.5A (Australia)
AC ADAPTOR	400-5126	AC ADAPTOR AC 220V/DC9V 0.5A (Europe)
AC ADAPTOR	400-5129	AC 240V/DC9V 0.5A (UK)
RF. MOD.	200-5091-A	RF MODULATOR UB 3622 (I-PAL)
RF. MOD.	200-5198	RF MODULATOR VE 3423 (B-PAL VE)
RF. MOD.	200-5086	RF MODULATOR UE 3622 (G-PAL)
	610-5127	ASSY CONTROL PAD 3020-03
	610-5128	ASSY RF SW BOX W/RF CABLE
	671-1215	SUPPORT BOARD MS2 MULTI
	601-6681	STYROFOAM MS2 MULTI L/R
	671-1155	BOXC MS2 BLACK MULTI
	671-1156	MA CTN MS2 MULTI
	672-0228	INSTR MANUAL M4 JR. MULTI
	253-6426-01	BOTTOM CASE M4 JR. BLACK PAL
	250-5185	TOP SHIELD M4 JR.
	250-5186	BOTTOM SHIELD M4 JR.
	253-6425	TOP CASE M4 JR. BLACK
	253-6352	DOOR M4 JR.
	253-6427	PAUSE SW MR JR. BLACK
	253-6428	POWER BUTTON M4 JR. BLACK
PCB	171-5922A	PC BD M4JR PAL
HOLDER	250-5187	HOLDER M4JR
CN1	209-5023	EDGE CONN 50P PSB4D25S-4R1
CN2	209-5017	D-SUB CONN 9P
CN3	209-5017	D-SUB CONN 9P
CN4	212-5004	PIN PLUG FOR DC/NP UC-0056 #1
POWER SW	509-5240-01	SLIDE SW HSW1699-01-010
PAUSE SW	509-5207	TACT SW SKEVAA
PAUSE SW	510-5019	TACTILE PUSH SW SKEVAA
IC1	315-0041	IC Z80A
IC2	MPR-12808	IC OS 1M MASK M4 JR
IC3	315-0298	IC UPD4168C-20
IC4	315-5237	IC GA UPD65005C-114
IC5	315-5246	IC CUSTOM CHIP UPD9004G
IC6, IC7	315-0298-15	IC UPD4168C-15
IC8	313-0092	IC MA7805UC
IC9	313-5067	IC CXA1145P
D1	481-0149-01	DIODE 1S2473
D2	481-5038-01	DIODE 1SR-35-100A
L1	180-5033	PEAKING COIL 12 UH
L2, L3	180-5032	PEAKING COIL 100UH
R1, R2	479-0472	RES 4.7 KOHM 1/6 W
R9	479-0472	RES 4.7 KOHm 1/6 W
R11, R22, R24, R25	479-0102	RES 1 KOHM 1/6 W
R4	479-0104	RES 100 KOHM 1/6 W

R5, R6	479-0331	RES	330 OHM	1/6 W	
R7, R8	479-0331	RES	330 OHM	1/6 W	
R10	479-0332	RES	3.3 KOHM	1/6 W	
R12, R14, R16, R28	479-0822	RES	8.2 KOHM	1/6 W	
R13, R15, R17	479-0821	RES	820 OHM	1/6 W	
R18, R20, R29	479-0222	RES	2.2 KOHM	1/6 W	
R19, R30	479-0152	RES	1.5 KOHM	1/6 W	
R21	479-0202	RES	2 KOHM	1/6 W	
R26	479-0273	RES	27 KOHM	1/6 W	
R27	479-0103	RES	10 KOHM	1/6 W	
C1, C2, C3, C4, C5, C6, C9, C10, C11, C12, C13, C25, C53	151-0126	CAP CER	82PF	50V	
C7, C8, C19, C23, C45, C46, C47, C48, C49	151-0020	CAP CER	33PF	50V	
C14, C17	151-0021	CAP CER	20PF	50V	
C15	151-0002	CAP CER	100PF	50V	
C16, C21, C22	151-0018	CAP CER RA	150PF	50V	
C18, C32, CE1, CE2, CE3, CE4, CE5, CE6	150-0023	CAP E	10UF	16V	
C20, C50	151-0072	CAP CER	51PF	50V	
C24	151-0156	CAP CER	270PF	50V	
C26, 34	151-0011	CAP CER	0.01 UF	50V	
C27, C28, C29, C39, C40, C54	151-0060	CAP CER	0.1 UF	16V	
C30	151-0075	CAP CER RA	180PF	50V	
C31	150-0009	CAP E	1UF	50V	
C33, C35	151-0190	CAP CER	12PF	50V	
C36	151-0159	CAP CER RA	100PF	50V	
C37	151-0172	CAP CER	180PF	50V	
C38, C42, C43	150-0047	CAP E	100UF	10V	
C41	150-0059	CAP E	100UF	16V	
C44	150-0062	CAP E	47UF	10V	
C51	151-0287	CAP CER	27PF	50V	
C52	151-0079	CAP CER	47PF	50V	
CP1, CP2, CP3, CP4, CP5, CP6, CP7, CP8, CP9, CP10, CP11, CP12, CP13	151-0170	CAP CER AX	0.022UF	16V	
FB1, FB2, FB3, FB4, FB5, FB6, FB8, JV, JG	271-0005-1	BEADS INDUCTOR FBA04VA600VB-00			
FB7	270-5027	LINE FILTER			
FB9, FB10	270-5035	LINE FILTER	FBR07HA121		

EM11, EM12, EM13, EM14, EM15, EM16, EM18, EM21, EM22, EM23, EM24, EM25, EM26, EM28	271-0007	EMI FILTER STX222MB
EM17, EM27	271-0006	EMI FILTER STB271KB
OSC	230-5058	OSC 53.203424M 20PPM
RA1	477-0005	RES PACK 8*4.7K (RA8-4728K)
GRS	601-0076	TML JNT CMPD 200G/TUBE (AMICOM)

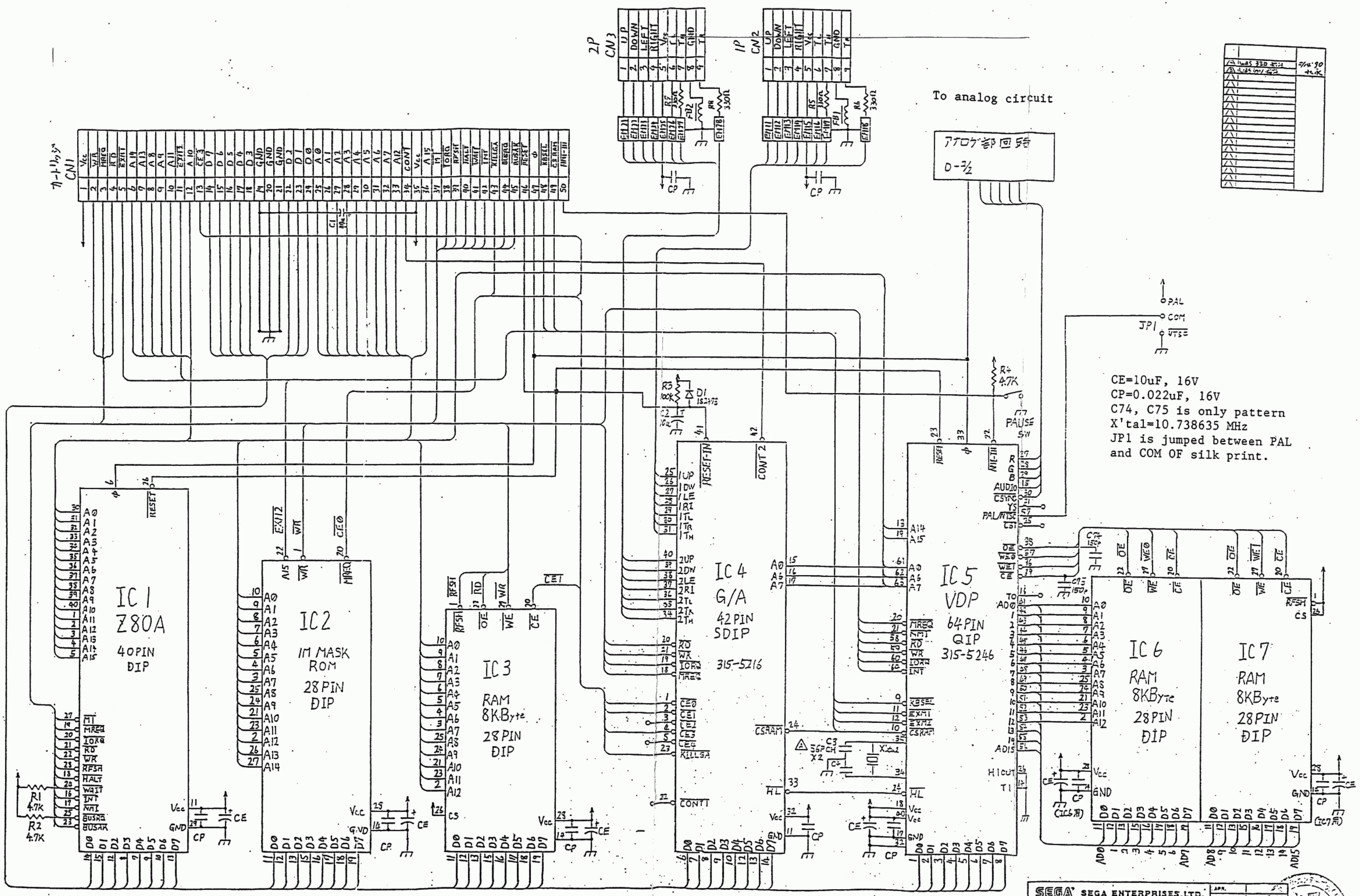
To analog circuit
アナログ部回路
D-2/2
2P CN3
1P CN2
カートリッジ CN1
IC 1
Z80A
40PIN
DIP
IC 2
1M MASK
ROM
28PIN
DIP
IC 3
RAM
8KByte
28PIN
DIP
IC 4
G/A
42PIN
SDIP
315-5216
IC 5
VDP
64PIN
QIP
315-5246
IC 6
RAM
8KByte
28PIN
DIP
IC 7
RAM
8KByte
28PIN
DIP
PAUSE SW
JP1
PAL
COM
CE=10uF, 16V
CP=0.022uF, 16V
C74, C75 is only pattern
X'tal=10.738635 MHz
JP1 is jumped between PAL
and COM OF silk print.
SEGA ENTERPRISES,LTD.
IC BD M4 Jr. RGB
171-5926
REV
DESCRIPTION
PART NO.

MACHINE 機種名	SUB-ASS'Y 組立名
	610-5147
ALTERATIONS 改訂	

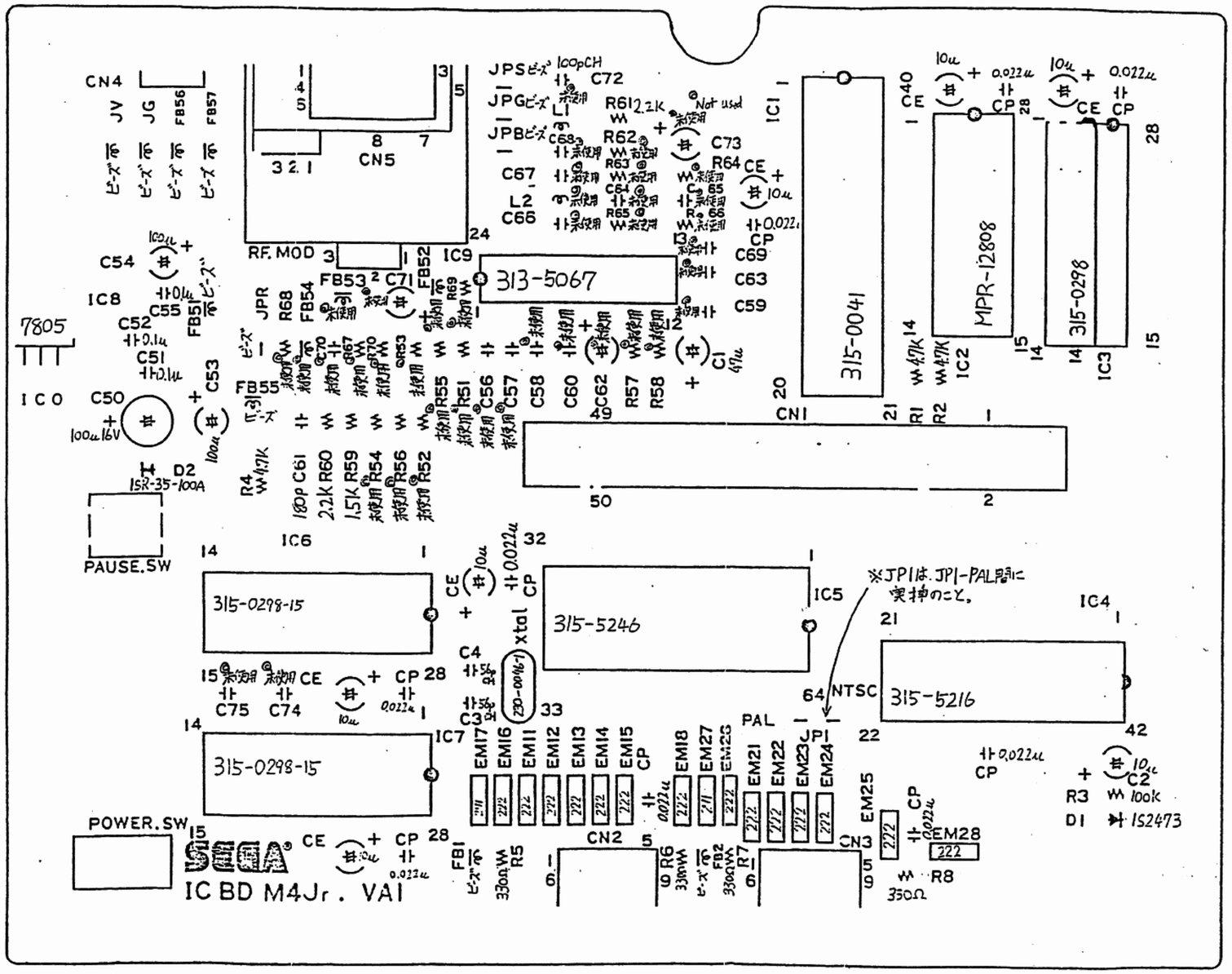

SEGA	SEGA ENTERPRISES, LTD.	THIS DRAWING WILL IN NO WAY BE COPIED. TO BE RETURNED ON DEMAND.	許可ナク複写 複製等厳禁
LIMITS UNLESS OTHERWISE SPECIFIED 一般公差	3RD QUAT. PROJ. DRAWING 第三角法	設計・製図	検図	検認	承認
	SCALE 尺度 ×	稲垣	田本		工藤
	DIM. IN 単位 mm	12/22-'90	1/8-'91		1/8-'91
MATERIAL 材料	HEAT TREAT. 熱処理	FINISH 表面処理	REMARK 特記事項	REV.
IC BD M4JR RGB			837-7560 (D-2/2)	

837-7560 (D-2/2)

Parts List For Master System II RGB Version

LOCATION	PART NUMBER	DESCRIPTION		
	610-5127	ASSY CONTROL PAD 3020-03		
	400-5048Y	AC ADAPTOR AC220V/DC9V 1A		
	610-0130	RGB BOX FRANCE		
	671-1215	SUPPORT BOARD MS2 MULTI		
	601-6681	STYROFOAM MS2 MULTI L/R		
	671-1155	BOX MS2 BLACK MULTI		
	671-1156	MA CTN MS2 MULTI		
	672-0228	INSTR MANUAL M4 JR. MULTI		
	253-6426-02	BOTTOM CASE M4 JR. BLACK RGB		
	250-5185	TOP SHIELD M4 JR.		
	250-5186	BOTTOM SHIELD M4 JR.		
	670-0835	SEAL SER. NO. M4 JR. RGB		
	253-6425	TOP CASE M4 JR. BLACK		
	253-6352	DOOR M4 JR.		
	253-6427	PAUSE SW MR JR. BLACK		
	253-6428	POWER BUTTON M4 JR. BLACK		
PCB	171-5926A	PC BD M4JR VA1		
CN1	209-5023	EDGE CONN 50P PSB4D25S-4R1		
CN2, CN3	209-5017-01	D-SUB 9P ANGLE TYPE UC-0060 #2		
CN4	221-5004	PIN PLUG FOR DC/NP UC-0056#1		
CN5	212-5106	DIN CONN B-TYPE UC-0059#2		
POWER SW	509-5240-01	SLIDE SW HSW1699-01-010		
PAUSE SW	509-5207	TACT SW SKEVAA		
PAUSE SW	510-5019	TACTILE PUSH SW SKEVAA		
IC1	315-0041	IC Z80A		
IC2	MPR-12808	IC OS 1M MASK M4 JR		
IC3	315-0298	IC UPD4168C-20		
IC4	315-5216 ISZ237	IC CUSTOM CHIP G/A		
IC5	315-5246	IC CUSTOM CHIP UPD9004G		
IC6, IC7	315-0298-15	IC UPD4168C-15		
IC8	313-0092	IC MA7805UC		
D1	481-0149-01	DIODE 1S2473 RADIAL		
D2	481-5038-01	DIODE 1SR-35-100A RADIAL		
R1, R2	479-0472	RES	4.7 KOHM	1/6 W
R3	479-0104	RES	100 KOHM	1/6 W
R4	479-0472	RES	4.7 KOHM	1/6 W
R5, R6	479-0331	RES	330 OHM	1/6 W
R7, R8	479-0331	RES	330 OHM	1/6 W
R59	479-0152	RES	1.5 KOHM	1/6 W
R60, R61	479-0222	RES	2.2 KOHM	1/6 W
C1	150-0062	CAP E	47UF	10V
C2	150-0023	CAP E	10UF	16V
C3, C4	151-0279	CAP CER	56PF	50V
C50	150-0059	CAP E	100UF	16V
C51, C52	150-0060	CONN	0.22MF	16V

C53, C54	150-0047	CAP E	100UF	10V
C55	151-0060	CAP CER	0.1UF	16V
C61	151-0075	CAP CER RA	180PF	50V
C72	151-0159	CAP CER RA	100PF	50V
CP1, CP2, CP3, CP4, CP5, CP6, CP7, CP8, CP9,	151-0170	CAP CER AX	0.022UF	16V
CE1, CE2, CE3, CE4, CE5, CE6	150-0023	CAP E	10UF	16V
FB1, FB2, FB51, FB55, FB56, FB67, JV, JG, JPR, JPG, JPB, JPS,	271-0005-1	BEADS INDUCTOR FBA04VA600VB-00		
X'TAL	230-0046-1	XTAL 10.738635		
EM11, EM12, EM13, EM14, EM15, EM16, EM18, EM21, EM22, EM23, EM24, EM25, EM26, EM28	271-0007	EMI FILTER	STX222MB	
EM17, EM27	271-0006	EMI FILTER STB271KB		
JP1	600-5061	JUMPER WIRE 5MM		
HOLDER	250-5187	HOLDER M4JR		
GRS	601-0076	TML JNT CMPD 200G/TUBE (AMICON)		
S-LOCK	090-0012	SCREW LOCK		
CN2L, CN2R, CN3L, CN3R	012-0306	TAP SCR PH 3*6		
7805-HOLDER	029-0214	S-TITE SCR PH M3*8		
CN1L, CN1R	048-0001	EYLET 3.5*7		
DINHOLDER	250-5013	DIN CONN HOLDER		